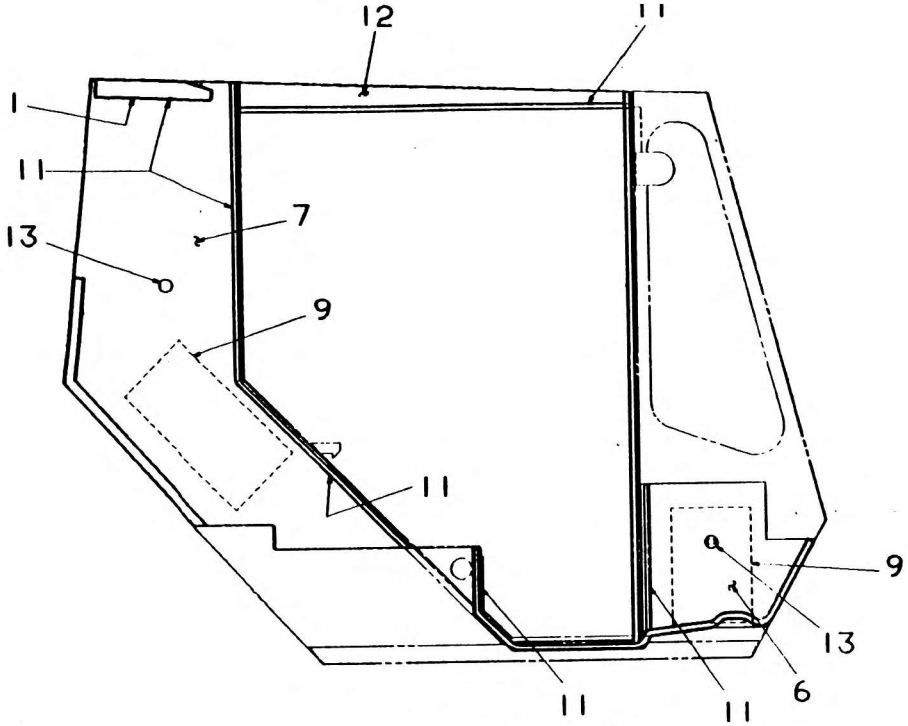

VIEW INSIDE CAB LOOKING LEFT

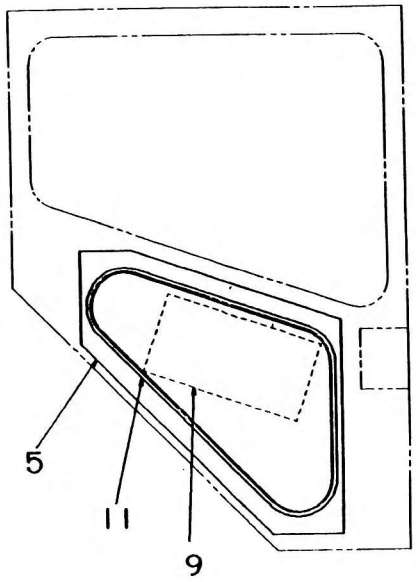

VIEW SHOWING INSIDE OF DOOR